PROGRAMMABLE ELECTRONIC CIRCUIT BREAKER

The design of a programmable electronic circuit breaker is shown below which utilizes the UC3843A control IC to facilitate a high speed turn-off following an overcurrent condition. This low cost, industry standard IC contains the required protection features and drive capability in a single 8 pin device.

CIRCUIT OPERATION

Power to the controller is provided by a simple, low cost 60Hz transformer from the AC line which delivers 12 VAC at the secondary. The output current is determined primarily by the relay used with an additional 10 milliamps, or so, drawn by the IC. Undervoltage lockout prevents any operation until 10 VDC is obtained across capacitor C1, when the UC3843A will turn on. The PWM output at pin 6 goes high which drives the relay ON and switches the load across its respective power source. The load current is sensed by the current transformer T2, multiplied by its turns ration(N) and develops a voltage across the sense resistor R4. This resistor is scaled to delivery 1 volt maximum at the full load current and is one input to the PWM comparator.

While the output at pin six is high transistor Q1 is also turned ON which disables the ICs oscillator, locking the output high until toggles by the PWM. A 10k resistor (R5) to the supply voltage (pin 7) supplies bias to Q1 after the output has gone low, providing a latched OFF condition. This can easily be reset by pulling Q1's gate low through 1k ohms to ground as shown.

SCHEMATIC DIAGRAM

ELECTRONIC CIRCUIT BREAKER FEATURES HIGH SPEED CURRENT LIMITING

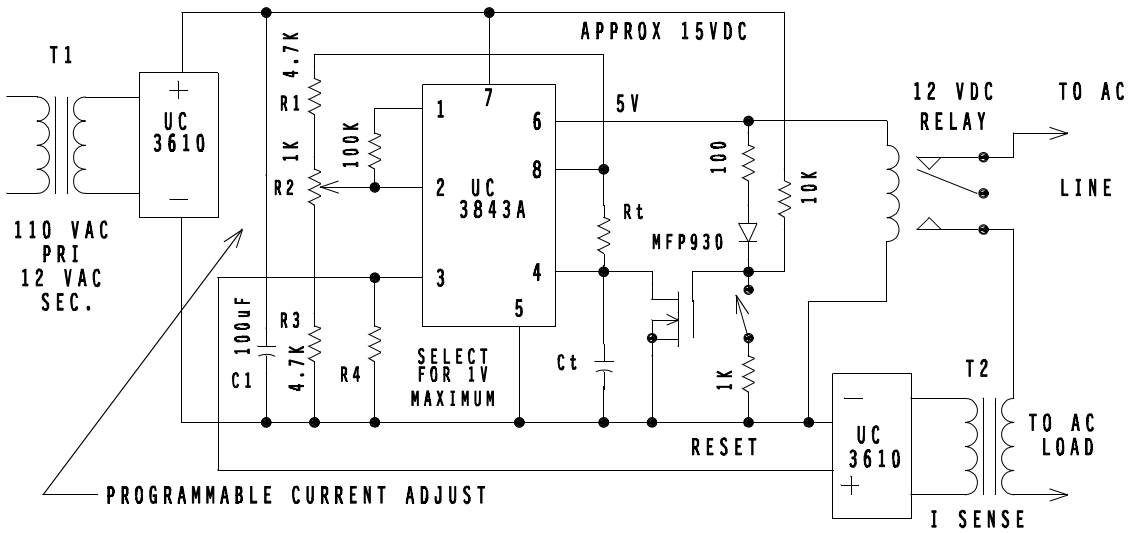

The other input to the PWM comparator is represented by the voltage at pin 1, the error amplifier output which can be adjusted by resistor R2. Internally, this voltage is reduced by two diode drops then attenuated to one-third its amplitude. The PWM circuitry compares this voltage with that of the current sense input at pin 3. When the current sense input exceeds the threshold set by resistor R2, the comparator is tripped and the ouptput at pin 6 is latched OFF.

UNITRODE CORPORATION
7 CONTINENTAL BLVD. • MERRIMACK, NH 03054
TEL. (603) 424-2410 • FAX (603) 424-3460